Red Rapids

SigStream™ XCVR2 16/250

Model 272

PCIe

XMC

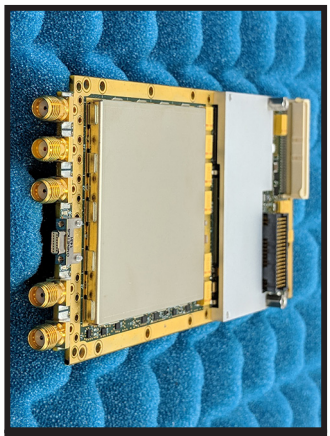

CCXMC

VPX

The SigStream™ product family transforms a general purpose computer into a high speed signal acquisition/generation platform. The hardware incorporates a rich set of software programmable features that include selectable operating modes, external or timed event triggers, timestamped data samples, and flexible data formatting.

The Model 272 is designed around the Analog Devices AD9652 16-bit dual ADC and AD9142A DAC. The 250 MHz sample clock is supplied by either the on-board frequency synthesizer or an external source. The frequency synthesizer can be phase locked to the local 10 MHz TCXO or an external reference can be used to achieve system-wide phase coherence.

Adopting open architecture hardware and software standards allows SigStream™ products to seamlessly transition from the desktop to embedded platforms.

Typical Applications

Radar & comms	Test & measurement
Signal record/playback	Acquisition & telemetry
Software defined radio	Medical diagnostics
Transponder	DSP accelerator

Two AC or DC coupled 16-bit ADC channels

Two AC or DC coupled 16-bit DAC channels

Internal or external sample clock (≤ 250 MHz)

Phase locked frequency synthesizer

Internal or external 10 MHz reference

Selectable triggers (HW, SW, TOD)

Continuous, snapshot, periodic operation

ANSI/VITA 49 compliant data format

Temperature and power supply monitors

PCI Express (PCIe) x8 or x4 host bus

High performance scatter-gather DMA

Front and rear auxiliary connectors

Demostration software (C) with source

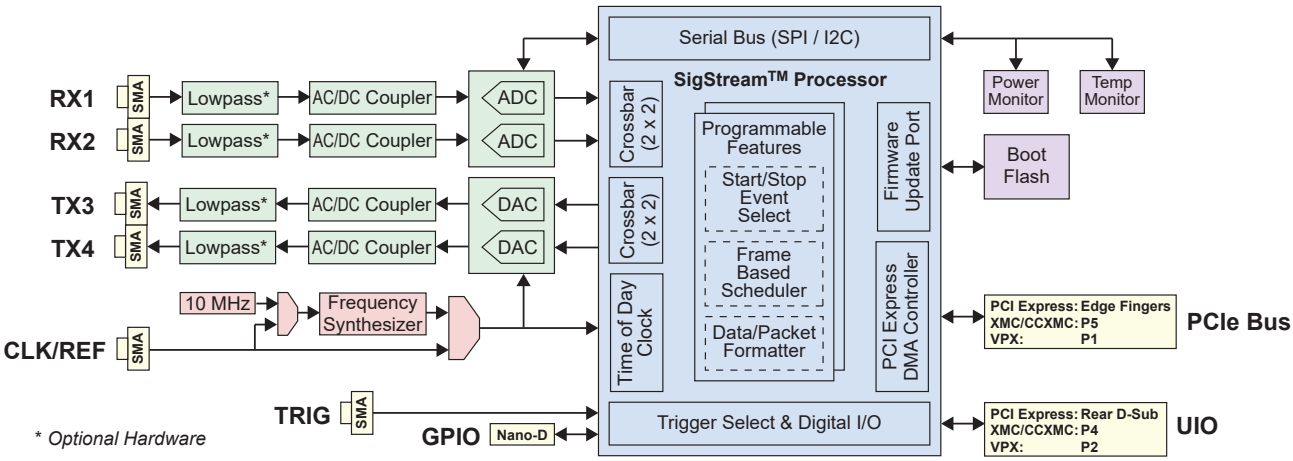

Form Factor

PCI Express (air cooled)	PCI Express 2.1, standard height, half-length, x8 or larger physical edge connector
XMC (air cooled)	ANSI/VITA 42.0 single-width, ANSI/VITA 42.3
CCXMC (conduction cooled)	XMC plus ANSI/VITA 20
VPX (air or conduction cooled)	3U Eurocard, VITA 65, front panel I/O

Digital I/O

PCI Express Bus on Edge Fingers (PCI Express), P5 (XMC/CCXMC), P1 (VPX)	x8 or x4 electrical, Gen 2 backward compatible with Gen 1 and upward comaptible with Gen 3
General Purpose I/O (GPIO) on 15-pin Nano-D	50 Ω or Hi-Z terminated LVTTL (3.3V / 5V tolerant) trigger, plus 6-bits customized upon request
User I/O (UIO) on 68-pin D-Sub (PCI Express), P4 (XMC/CCXMC), P2 (VPX)	62-bits customized upon request
Trigger [1] (TRIG) on SMA	50 Ω, (3.3V / 5V tolerant) LVTTL

Analog I/O

Receiver (RX) on SMA	50 Ω, ADC input
Transmitter (TX) on SMA	50 Ω, DAC output
Clock/Reference [1] (CLK/REF) on SMA	50 Ω, external sample clock or 10 MHz reference to internal sample clock

Power

PCI Express [2]	3.3V = 27mW AC Coupled: 12V = 14.1W DC Coupled: 12V = 18.4W
XMC or CCXMC [2]	3.3V = 27mW, VPWR = 9.4W AC Coupled: 12V = 4.7W DC Coupled: 12V = 7.3W, -12V = 1.4W
VPX [2]	3.3V = 27mW AC Coupled: 12V = 14.1W DC Coupled: 12V = 16.8W, -12V = 1.4W

Environmental [4]

Storage Temperature	-55 °C to 125 °C
Operating Ambient Temperature	-30 °C to 85 °C
Typical Air Flow	150 LFM
Max Heat Sink Temperature	95 °C

Start/Stop Events

Software Command	API function
External Trigger	SMA or GPIO connector input
Time of Day	ADC clock period fractional seconds resolution, seconds syncrhonized to external source (GPS, IRIG) or internal fractional seconds counter
Periodic Frame Length	≤ $2^{32} - 1$ ADC clock periods
Sample/Cycle Count	≤ $2^{32} - 1$ cycles
Scheduler	≤ 512 programmable time slots per frame

Clock/Reference (CLK/REF) Performance

Clock Frequency (Fs) Range	80 to 250 MHz
Internal Clock Phase Noise	-100 dBc/Hz (10 kHz offset)
Internal Reference Accuracy	10 MHz +/- 1 ppm

Typical RX Performance Characteristics

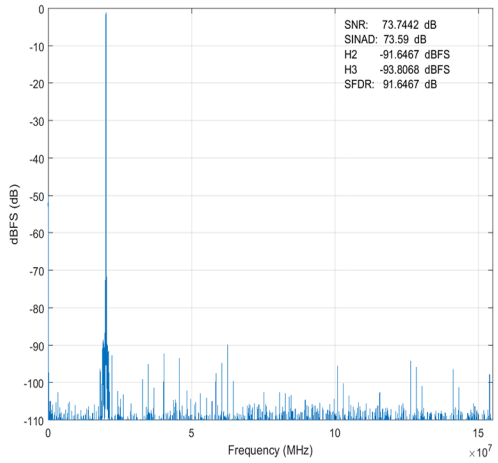

Receiver (RX) Performance (AC / DC Coupled)

1 dB Passband	1 to 150 MHz / DC to 200 MHz
3 dB Passband	0.1 to 400 MHz / DC to 450 MHz
Full Scale Input Amplitude	12.0 dBm (2.5 Vpp) / 4.0 dBm (1.0 Vpp)
SNR (20.17 MHz Input)	74.9 dB / 67.7 dB
SINAD (20.17 MHz Input)	74.8 dB / 67.6 dB
SFDR (20.17 MHz Input)	95 dBc / 93 dBc
Channel Isolation (100 MHz)	81 dB / 81 dB
Optional Lowpass Filter	5-pole Butterworth or Chebychev

Transmitter (TX) Performance (AC / DC Coupled)

DAC Interpolation Factor	2X (2Fs), 4X (4Fs), or 8X (8Fs)
Max Interpolated Rate (DACCLK)	2X: 1150 MHz, 4X: 1500 MHz, 8X: 1500 MHz
1 dB Passband	1 to DACCLK/3 MHz / DC to DACCLK/3 MHz
Full Scale Output Amplitude	-2.0 dBm (0.5 Vpp) / 4.0 dBm (1.0 Vpp)
Noise Spectral Density	-160 dBm/Hz / -148 dBm/Hz
SFDR (77.5 MHz Output)	85 dBc / 85 dBc
Sample Clock Feed Through	-82 dBm / -67 dBm
Channel Isolation (100 MHz)	>90 dB / >90 dB
Optional Lowpass Filter	5-pole Butterworth or Chebychev

Software

Driver (32-bit or 64-bit)	Windows 8/10, Linux
API & Demonstration Code	C (C++ compatible)

Single Piece Price

PCI Express, XMC, CCXMC	$3,990
VPX	$5,990

Contact Information

Address	Red Rapids 797 N Grove Rd, Suite 101 Richardson, TX 75081
Phone	972-671-9570 (+1 country code)

[1] The TRIG and CLK/REF inputs are mutually exclusive, either one must be selected as a build option.
[2] Voltages available on the connector that do not supply power are omitted. voltage converters.